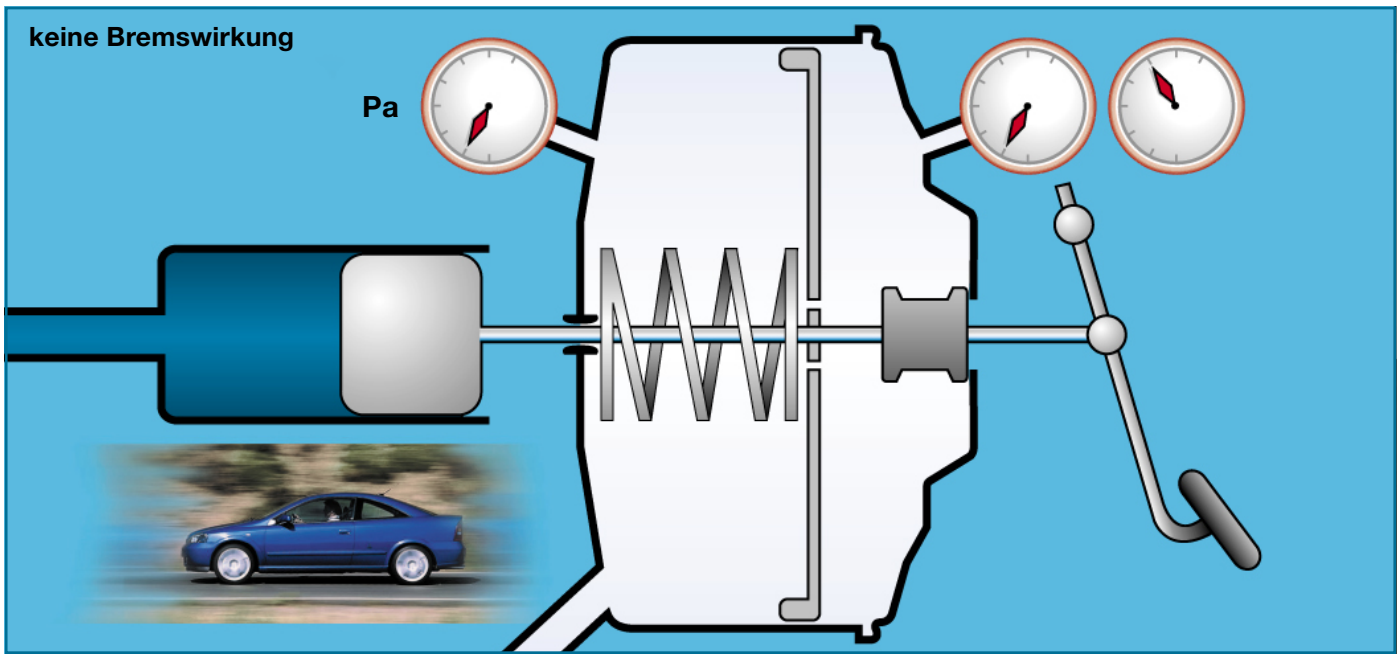

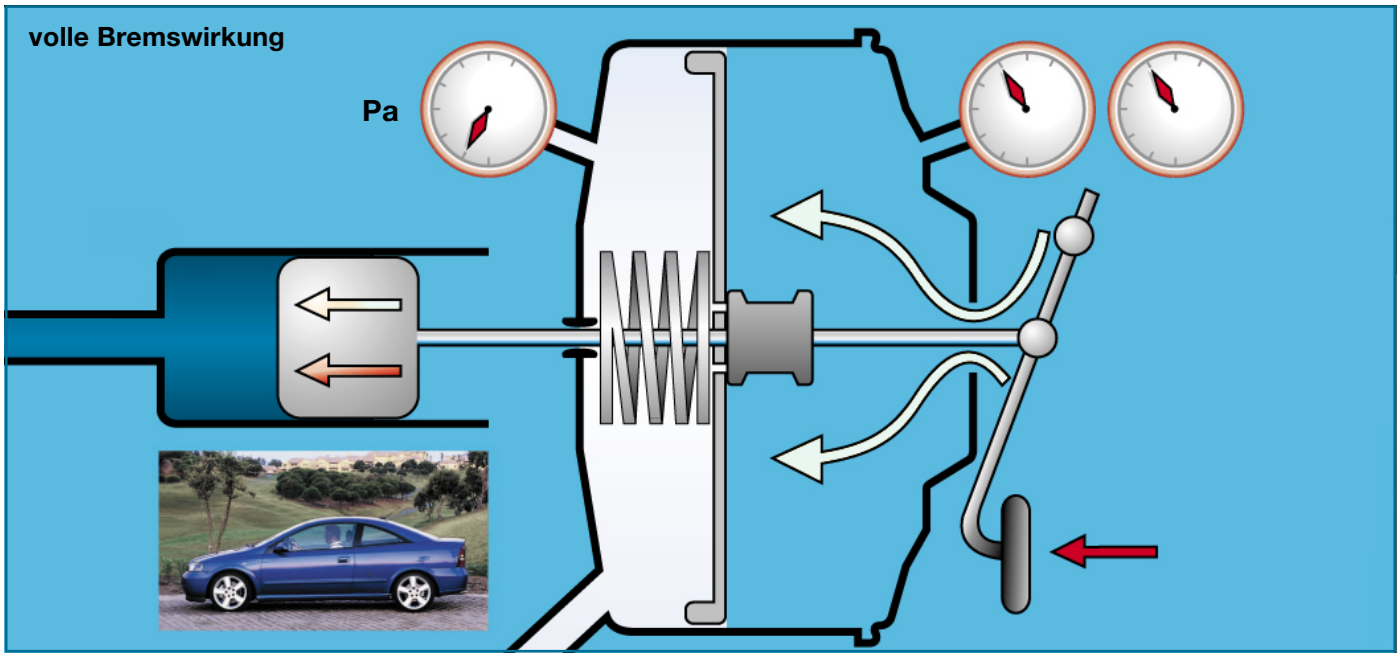

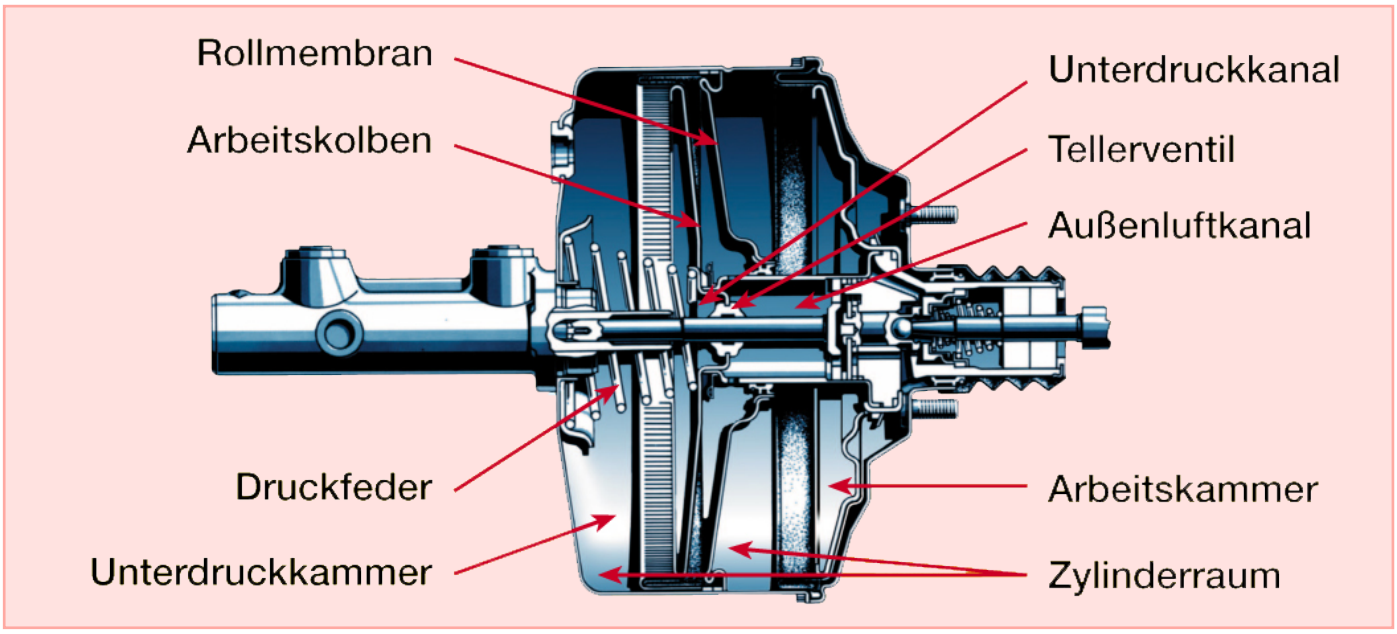

© Copyright 2019 reserved by Hagemann & Partner Bildungsmedien Verlagsgesellschaft mbH, Düsseldorf